Feb.1.2026 Copyright 2026 HIROSE ELECTRIC CO., LTD. All Rights Reserved.
In case of consideration for using Automotive equipment / device which demand high reliability, kindly contact our sales window correspondents.

	COUNT	DESCRIPTION OF REVISIONS	BY	CHKD	DATE		COUNT	DESCRIPTION OF REVISIONS	BY	CHKD	DATE
△					. .	△					. .
△					. .	△					. .
△					. .	△					. .

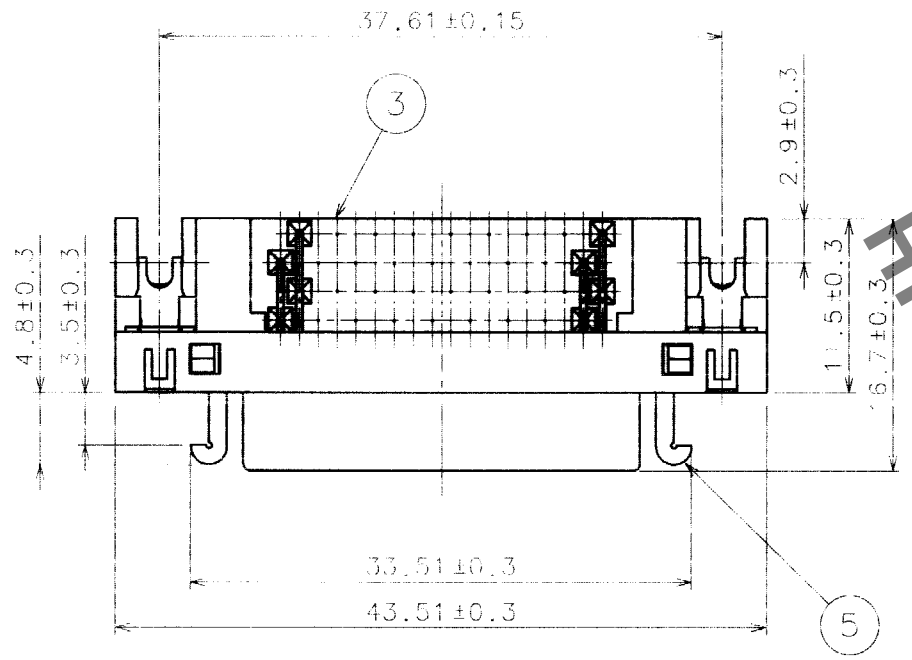

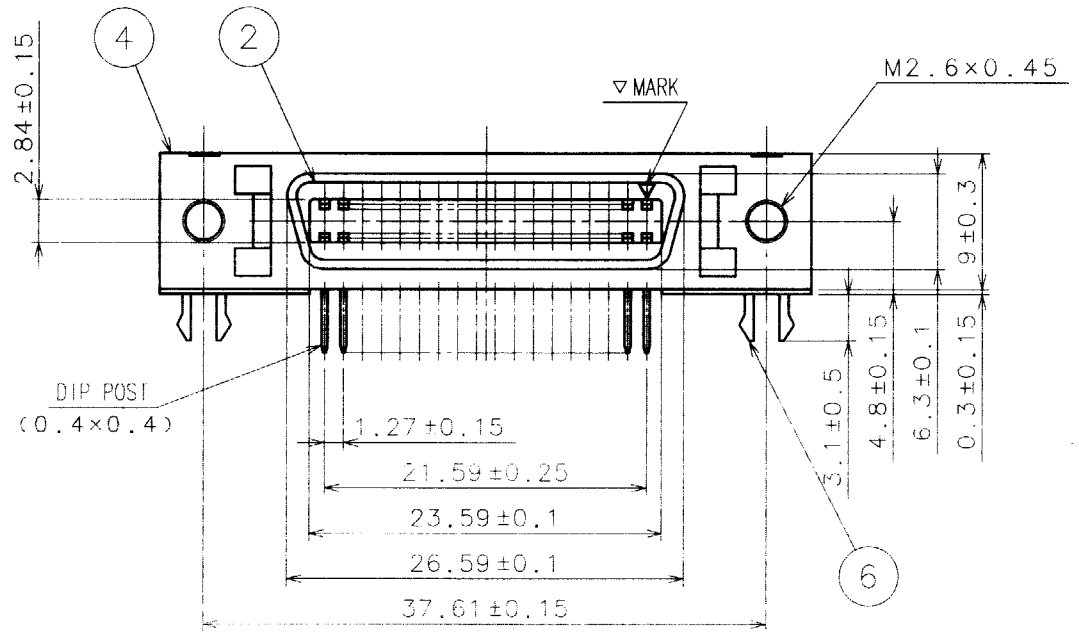

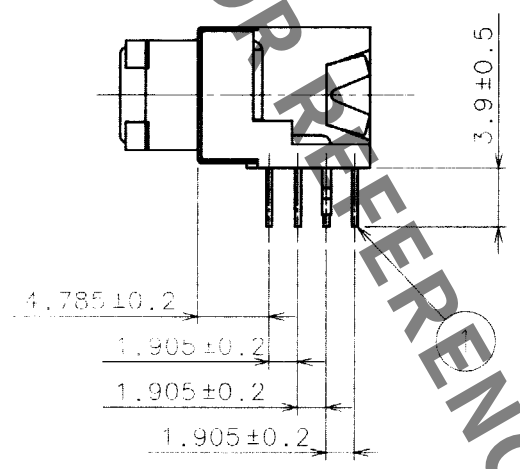

PC BOARD PATTERN
(RECOMMENDED BOARD TICKNESS 1.6mm)

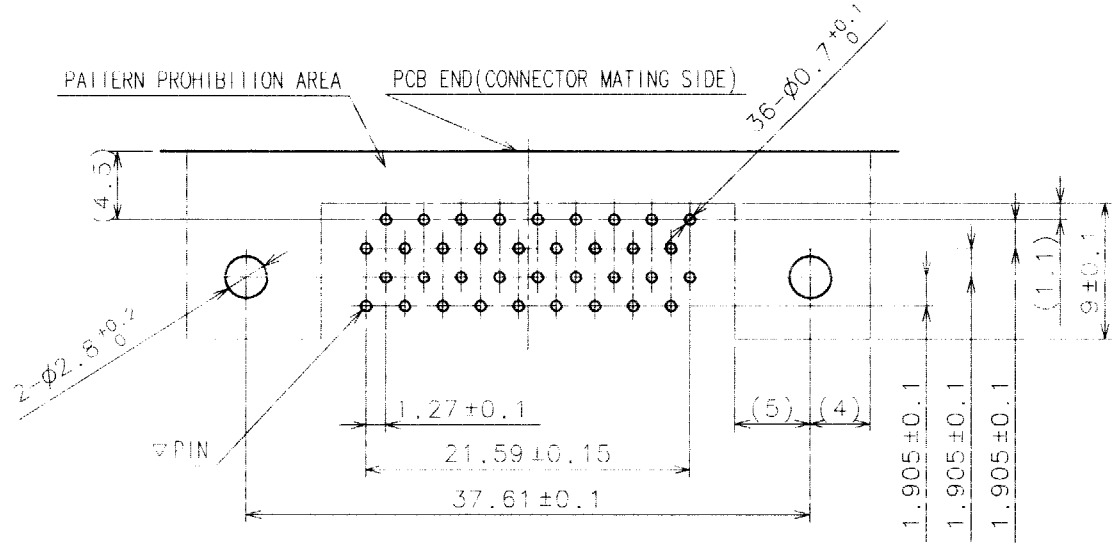

PANEL CUTOUT
(PANEL THICKNESS:1.6mm MAX)

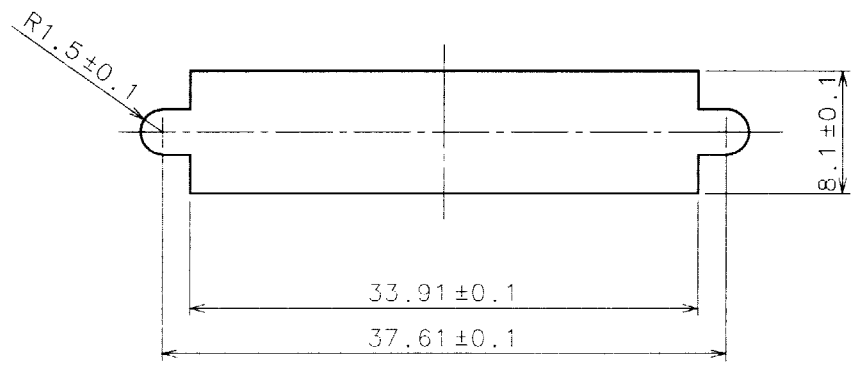

HRS DRAWING FOR REFERENCE

NO.	MATERIAL	FINISH, REMARKS	NO.	MATERIAL	FINISH, REMARKS
3	PBT	(BLACK) UL94V-0	6	BLASS	TIN PLATING
2	PBT	(BLACK) UL94V-0	5	STEEL	NICKEL PLATING
1	PHOSPHOR BRONZE	SELECTIVE GOLD FLASH PLATING	4	STEEL	NICKEL PLATING

CODE NO.(OLD)	DRAWN	DESIGNED	CHECKED	APPROVED	RELEASED
	T. Hamaguchi	T. Hamaguchi	Y. Enami	H. Miura	. .
	03.10.10	03.10.10	03.10.15	03.10.15	

SCALE 2 : 1	DRAWING NO. EDC3-120260-01	PART NO. DX10G1M-36SE(50)
UNITS mm	HRS HIROSE ELECTRIC CO., LTD	CODE NO. CL230-5213-7-50 1/1

TO
Q