IM73A135V01

IP57 dust and water resistant analog XENSIV™ MEMS microphone

Description

The IM73A135V01 is designed for applications which require a microphone with high SNR (low self-noise), low distortion (high AOP), which is also IP57 robust to dust and water.

Best-in-class Signal to Noise Ratio (SNR) of 73dB(A) enables far field and low volume audio pick-up. The flat frequency response (20Hz low-frequency roll-off) and tight manufacturing tolerance improve the performance of multi-microphone array applications.

The high performance analog microphone ASIC contains an extremely low noise preamplifier and a high performance differential output amplifier. Different power modes can be selected in order to suit specific current consumption requirements.

Each IM73A135V01 microphone is calibrated with an advanced Infineon calibration algorithm, resulting in small sensitivity tolerances (± 1dB).

Features

- Component level IP57 water and dust resistant
- Signal to noise ratio of 73dB(A) SNR
- Acoustic overload point at 135dBSPL
- Flat frequency response with low frequency roll off at 20Hz
- Power optimized modes determined by V_{DD} level
- Package dimensions: 4mm x 3mm x 1.2mm
- Differential output
- Omnidirectional pickup pattern

Typical applications

- Active Noise Cancellation (ANC) headphones and wireless earbuds
- Devices with Voice User Interface (VUI)
  - Smart speakers
  - Home automation
  - IoT devices
- High quality audio capturing
  - Conference systems
  - Cameras and camcorders
- Industrial or home monitoring with audio pattern detection

Ordering information

Table 1 Ordering information

Product name	Package	Marking	Ordering code
IM73A135V01	PG-LLGA-5-2	I73A03	SP003803274

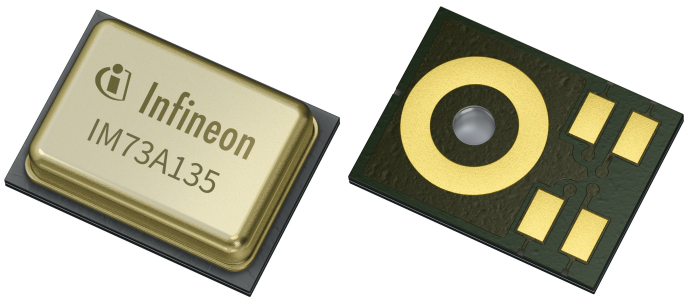

Block diagram

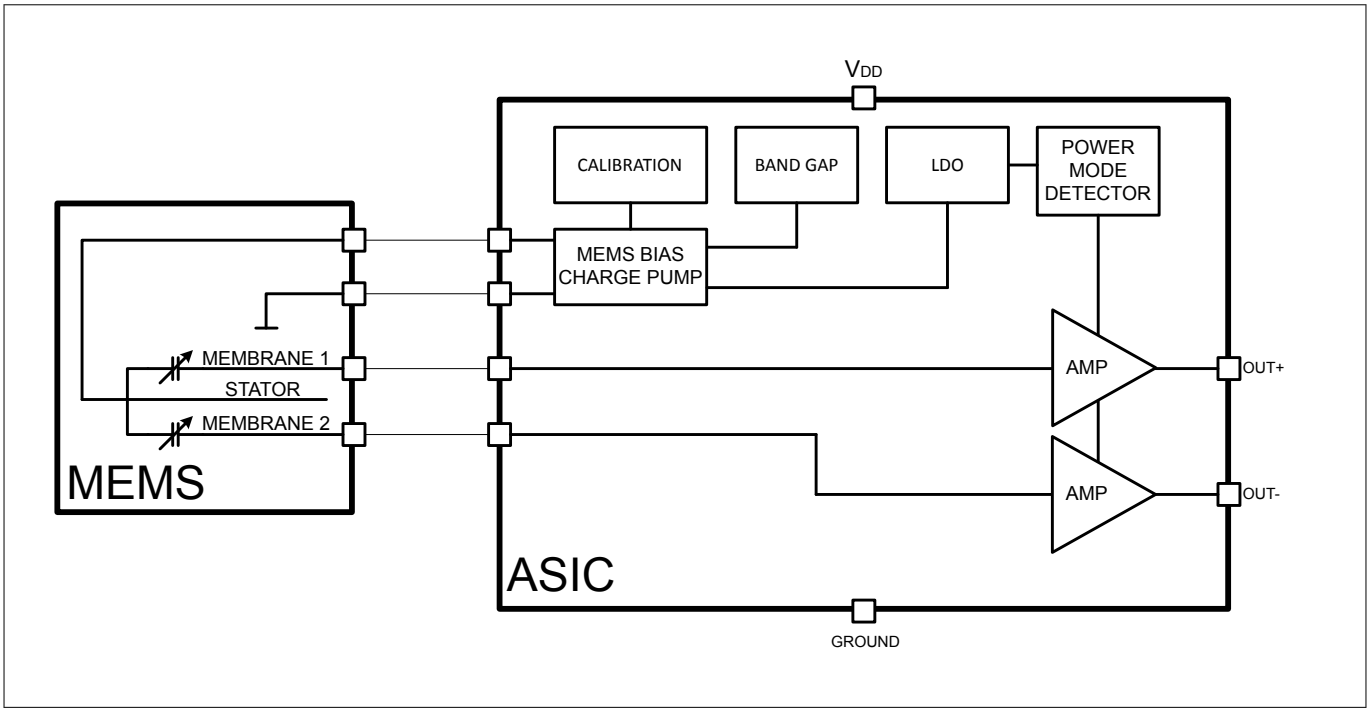

Figure 1 **IM73A135V01 block diagram**

Product validation

Technology qualified for industrial applications.

Ready for validation in industrial applications according to the relevant tests of IEC 60747 and 60749 or alternatively JEDEC47/20/22.

Environmental robustness

Infineon's latest Sealed Dual Membrane MEMS technology delivers high ingress protection (IP57) at a microphone level. The sealed MEMS design prevents water or dust from entering between membrane and backplate, preventing mechanical blockage or electric leakage issues commonly observed in MEMS microphones. Microphones built with the sealed dual membrane technology can be used to create IP68 devices, requiring only minimal mesh protection.

Table 2 **Environmental robustness**

Test Standard	Test Condition
IP5x dust resistance[1)]	Arizona dust A4 coarse, vertical orientation , sound hole upwards, 10 cycles (15 minutes sedimentation, 6 sec blowing)
IPx7 water immersion[2)]	Temporary immersion in 1 meter of water for 30 minutes. Microphone tested 2 hours after removal

1 The number "5" stands for the dust ingress rating or the capacity to withstand the effects of fine, abrasive dust particles.

2 The number "7" identifies the level of liquid protection.

Table of contents

Description 1
Features 1
Typical applications 1
Ordering information 1
Block diagram 2
Product validation 2
Environmental robustness 2
Table of contents 3
1 Typical performance characteristics 4
2 Acoustic characteristics 6
2.1 Free field frequency response 7
3 Electrical characteristics and parameters 8
3.1 Absolute maximum ratings 8
3.2 Electrical parameters 8
3.3 Electrical characteristics 10
4 Package information 11
5 Footprint and stencil recommendation 12
6 Packing information 13
7 Reflow soldering and board assembly 14
8 Reliability specifications 16
Revision history 17
Disclaimer 18

1 Typical performance characteristics

Test conditions(unless otherwise specified): V_{DD} = 2.75V, T_A= 25°C, output unloaded

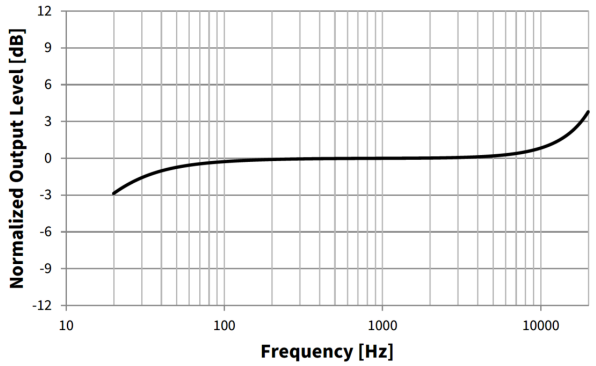

Figure 2 **Typical amplitude response**

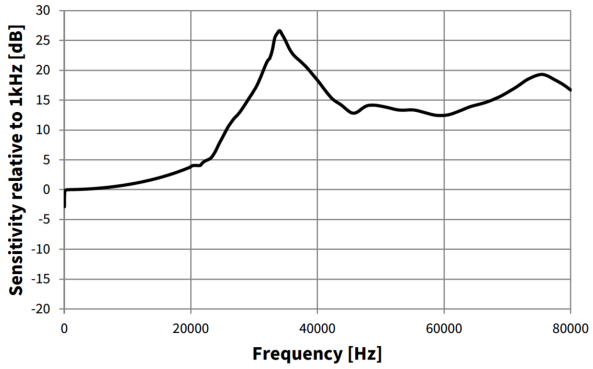

Figure 3 **Typical free field ultrasonic response**

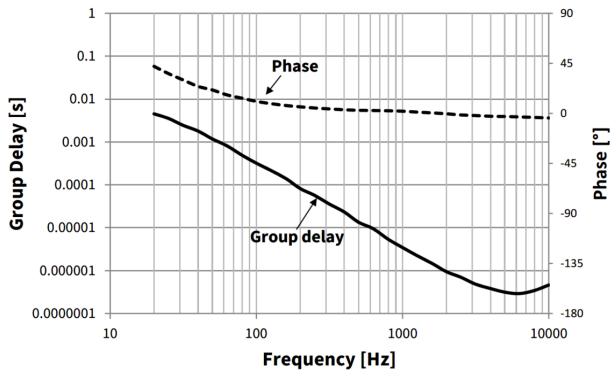

Figure 4 **Typical group delay and phase response**

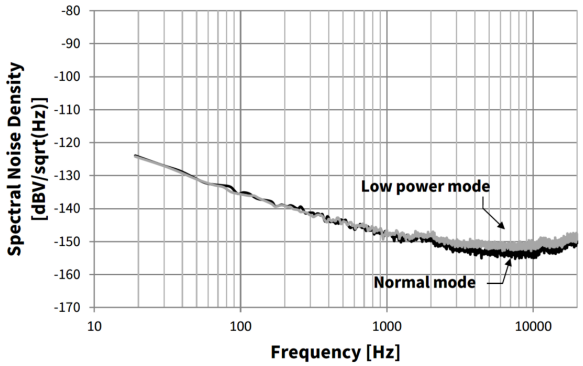

Figure 5 **Typical noise floor (unweighted)**

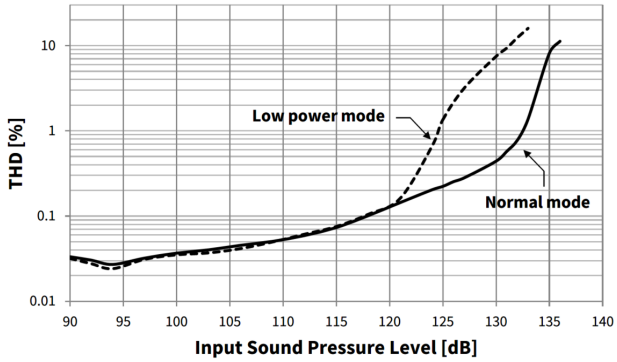

Figure 6 **Typical THD vs SPL**

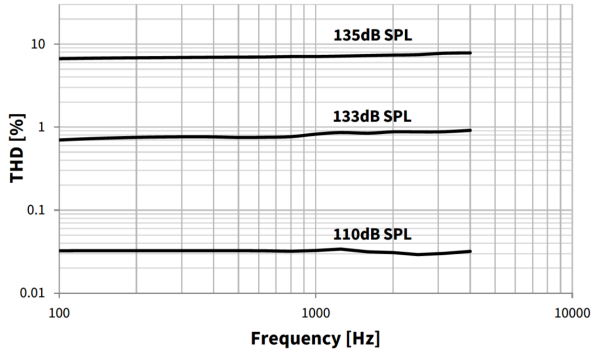

Figure 7 **Typical THD vs frequency**

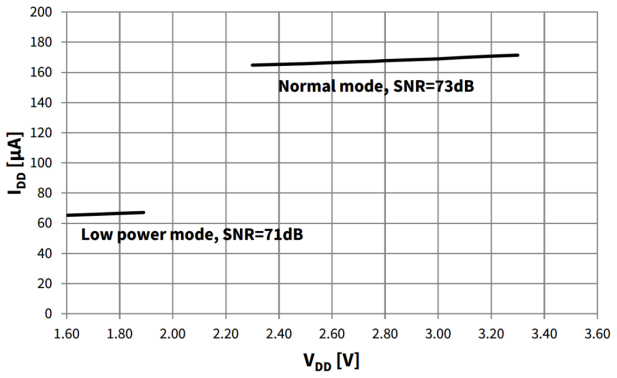

Figure 8 **Typical I_{DD} vs V_{DD}**

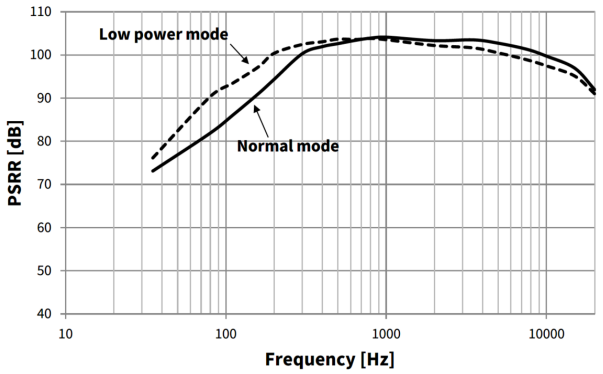

Figure 9 **Typical PSRR**

2 Acoustic characteristics

Test conditions (unless otherwise specified in the table): V_{DD} = 2.75V, T_A = 25°C, 55% R.H., audio bandwidth 20Hz to 20kHz, output unloaded

Table 3 IM73A135V01 acoustic specifications

Parameter			Symbol	Values			Unit	Note or Test Condition
				Min.	Typ.	Max.		
Sensitivity				-39	-38	-37	dBV	1kHz, 94 dB SPL, all operating modes
Low Frequency Cutoff Point			$f_{C\,LP}$		20		Hz	-3dB point relative to 1kHz
Acoustic overload point	Normal mode		AOP_{NP}		135		dBSPL	THD = 10%.
	Low power mode		AOP_{LP}		130			
Signal to Noise ratio	Normal mode		SNR_{NP}		73		dB(A)	A-Weighted
	Low power mode		SNR_{LP}		71			
Noise floor	Normal mode				-111		dBV(A)	A-Weighted
	Low power mode				-109			
Total harmonic distortion	Normal mode	94dBSPL	THD_{NP}		0.5		%	Measuring 2nd to 5th harmonics, 1kHz
		132dBSPL			1.0			
		135dBSPL			10.0			
	Low power mode	94dBSPL	THD_{LP}		0.5			
		124dBSPL			1.0			
		130dBSPL			10.0			
Phase Response	75Hz				12		°	
	1kHz				2			
	3kHz				-2			
Group Delay	250Hz				52		µs	
	600Hz				7			
	1kHz				2			
	4kHz				0.5			
Directivity				Omnidirectional				Pickup pattern
Polarity				Increasing Vout				Increasing SPL

2.1 Free field frequency response

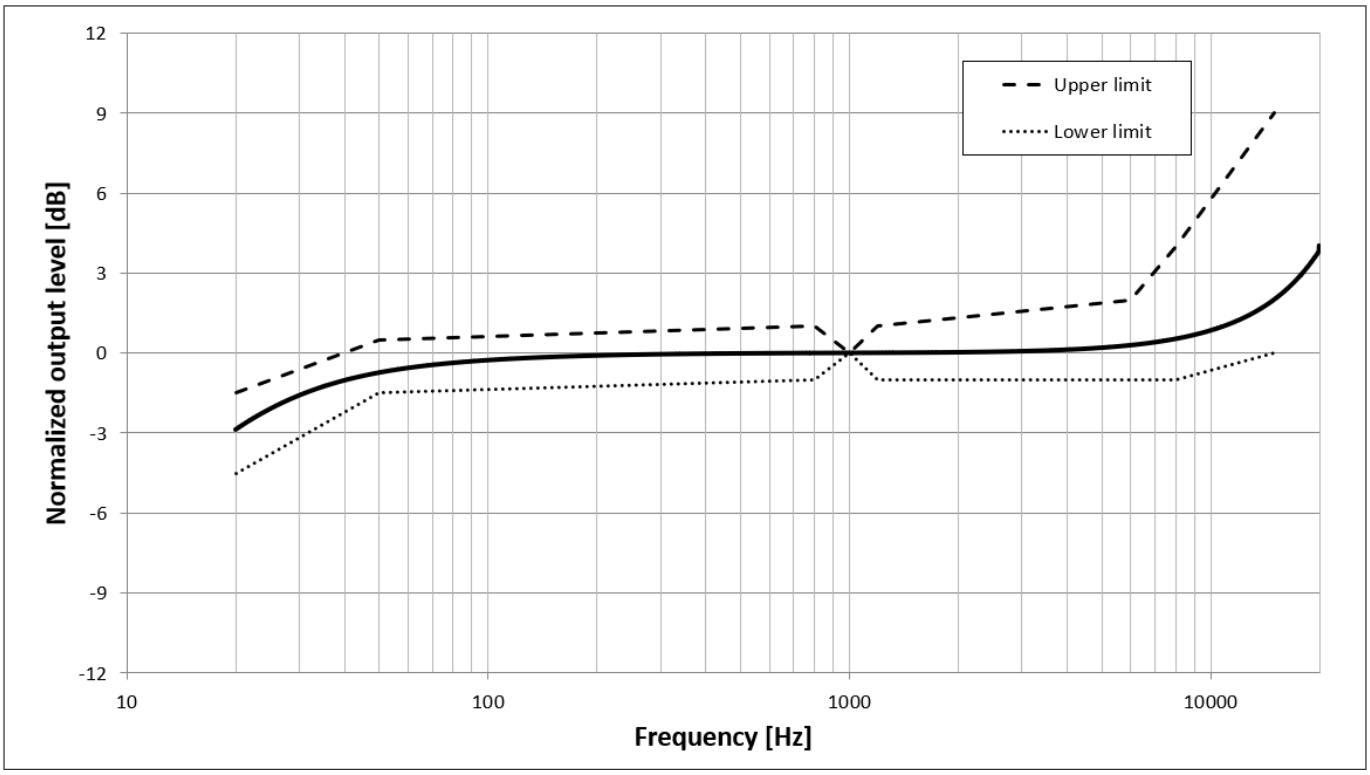

Figure 10 **IM73A135V01 free field frequency response**

Table 4 **IM73A135V01 free field frequency response, normalised to 1kHz sensitivity value.**

Frequency (Hz)	Upper Limit (dB)	Lower Limit (dB)
20	-1.5	-4.5
50	+0.5	-1.5
800	+1	-1
1000	0	0
1200	+1	-1
6000	+2	-1
8000	+4	-1
15000	+9	0

3 Electrical characteristics and parameters

3.1 Absolute maximum ratings

Stresses at or above the listed maximum ratings may affect device reliability or cause permanent device damage. Functional device operation at these conditions is not guaranteed.

Table 5 Absolute maximum ratings

Parameter	Symbol	Values		Unit	Note / Test Condition
		Min.	Max.		
Supply voltage	V_{DDmax}		3.0	V	
Storage temperature	T_S	-40	100	°C	
Operating temperature	T_A	-40	85	°C	

3.2 Electrical parameters

Table 6 IM73A135V01 electrical parameters

Parameter		Symbol	Values			Unit	Note / Test Condition
			Min.	Typ.	Max.		
Supply voltage	Normal mode	VDD	2.3	2.75	3.0	V	A 100nF bypass capacitor(C_{VDD}) should be placed close to the microphone V_{DD} pin to ensure best SNR performance
	Low power mode		1.52	1.6	1.8		
V_{DD} ramp-up time					5	ms	V_{DD} reaches its final value within ± 10 % tolerance
Output load	C_{load}	C_a, C_b			100	pF	
		C_d			100		
	R_{load}	R_p, R_n		25		kΩ	
Input VCM	Normal mode	V_{cm}	1.17	1.3	1.43	V	Input VCM is the voltage at the input pins of the audio front end if not driven
	Low power mode		0.765	0.85	0.935		

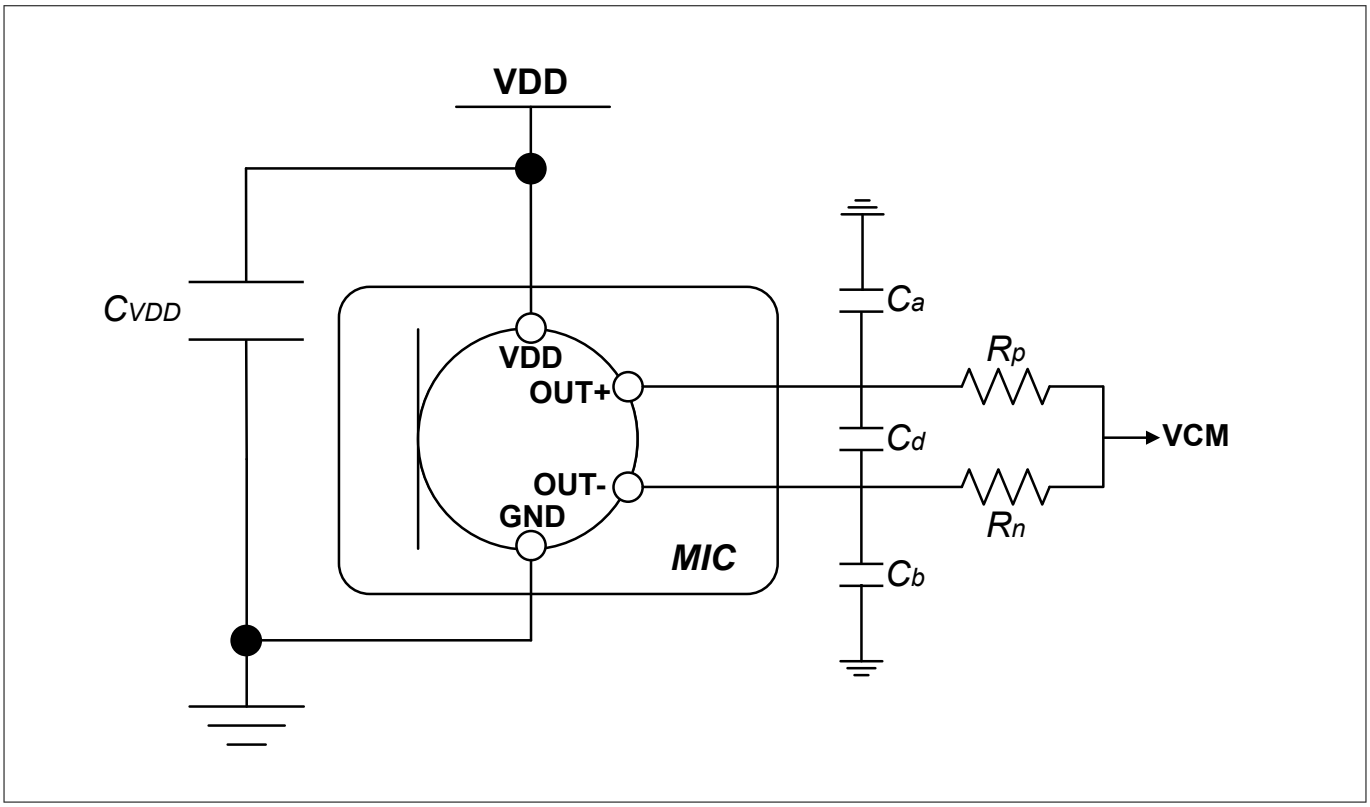

Figure 11 **Output load configuration**

3.3 Electrical characteristics

Test conditions (unless otherwise specified in the table): V_{DD} = 2.75V, T_A = 25°C, 55% R.H.

Table 7 IM73A135V01 electrical characteristics

Parameter		Symbol	Values			Unit	Note / Test Condition
			Min.	Typ.	Max.		
Current consumption	Normal mode	I_{DDNP}		170	230	µA	Input ≤ 94 dBSPL
	Low power mode	I_{DDLP}		70	80		
Start-up time		$t_{startup}$		10	30	ms	Start-up time in all operating modes after VDD_{min} is applied
Mode switching time		$t_{ModeChange}$		10		ms	Time of undefined output after mode change detected
Brown out voltage		$V_{BrownOut}$		1.2		V	Brown out is triggered for voltage below $V_{BrownOut}$
Vout DC-voltage	Normal mode	$V_{OUT_DC_NP}$		1.35		V	
	Low power mode	$V_{OUT_DC_LP}$		0.9			
Power supply rejection ratio in band (differential)	Normal mode	$PSRR_{InBand_NP}$		80		dB	V_{DD}=2.75V + 100mV_{pp} sinewave (PSR=1/Apower; Apower = Transfer function V_{DD} → Differential Output of ASIC)
	Low power mode	$PSRR_{InBand_LP}$		80			V_{DD}=1.6V + 100mV_{pp} sinewave (PSR=1/Apower; Apower = Transfer function V_{DD} → Differential Output of ASIC)
Power supply rejection ratio common mode	Normal mode	$PSRR_{CM_NP}$		65		dB	V_{DD}= 2.75 V + 100mV_{pp} sinewave
	Low power mode	$PSRR_{CM_LP}$		60			V_{DD}= 1.6 V + 100mV_{pp} sinewave
Output impedance	Normal mode	Z_{out_NP}			250	Ω	
	Low power mode	Z_{out_LP}			500	Ω	

4 Package information

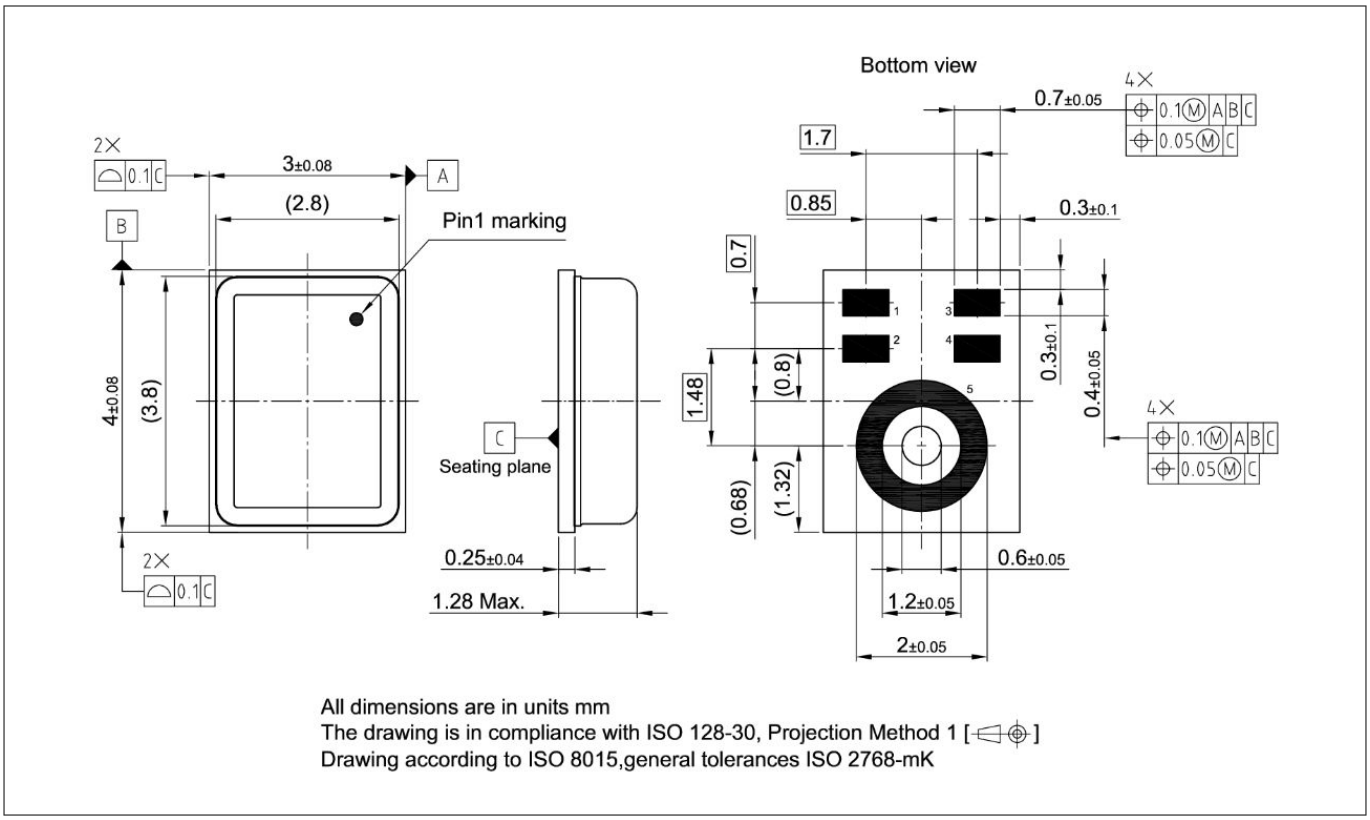

Figure 12 **IM73A135V01 package drawing**

Table 8 **IM73A135V01 pin configuration**

Pin Number	Name	Description
1	Output +	Differential Output +
2	V_{DD}	Power supply
3	Output -	Differential Output -
4	GND	Ground
5	GND	Ground

5 Footprint and stencil recommendation

The acoustic port hole diameter in the PCB should be larger than the acoustic port hole diameter of the MEMS Microphone to ensure optimal performance. A PCB sound port size of radius 0.4 mm (diameter 0.8mm) is recommended.

The board pad and stencil aperture recommendations shown in ***Figure 13*** are based on Solder Mask Defined (SMD) pads. The specific design rules of the board manufacturer should be considered for individual design optimizations or adaptations.

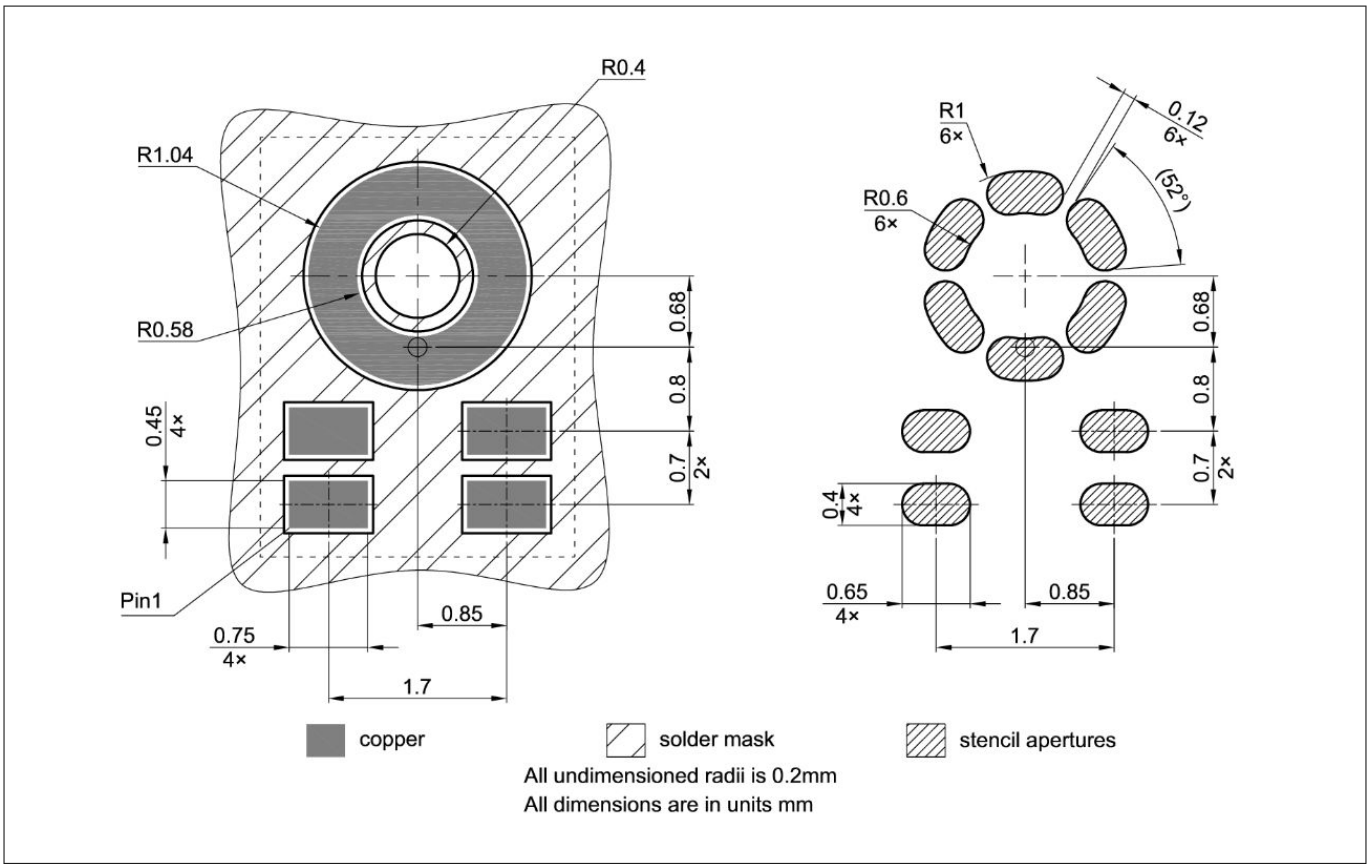

Figure 13 **IM73A135V01 footprint and stencil recommendation**

6 Packing information

For shipping and assembly the Infineon microphones are packed in product specific tape-and-reel carriers. A detailed drawing of the carrier can be seen in ***Figure 14***.

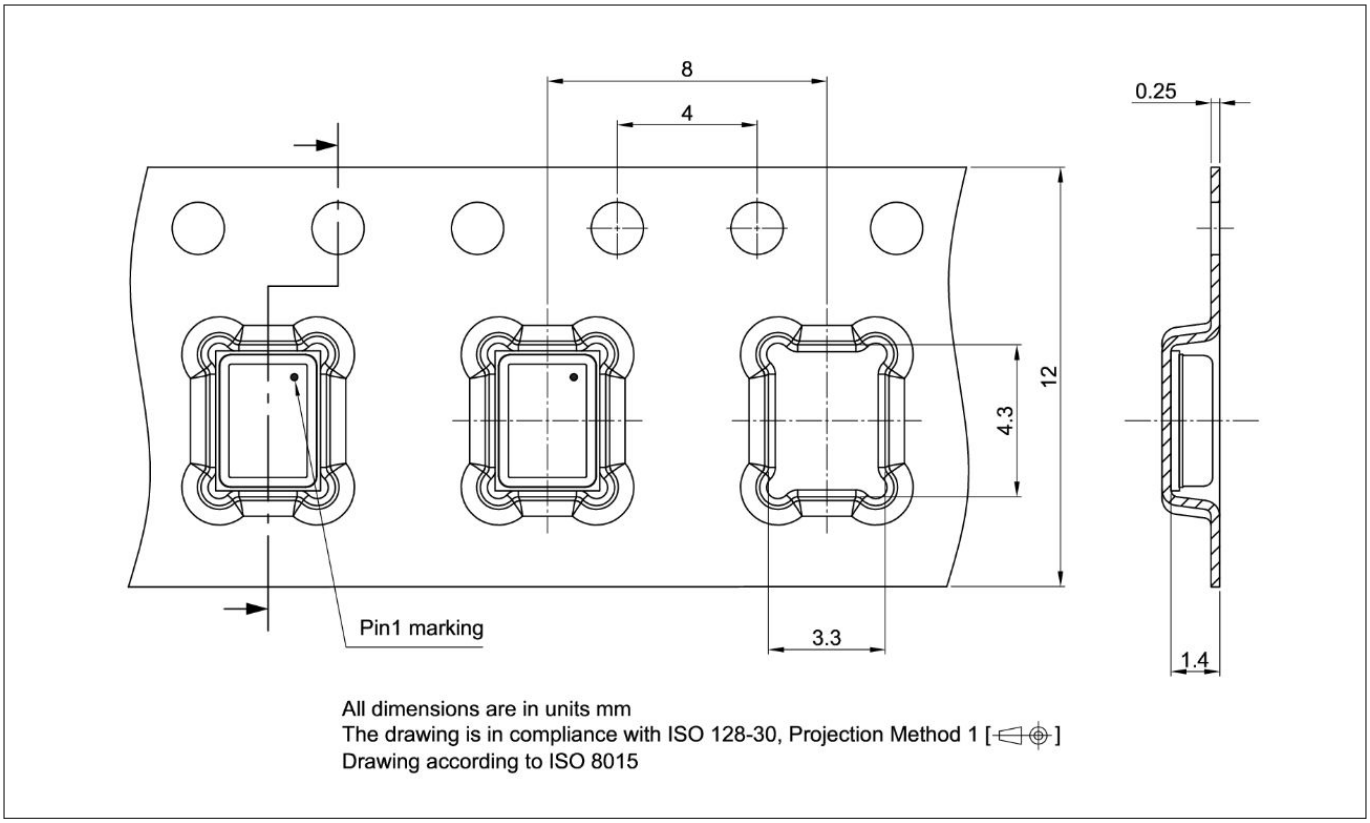

Figure 14 **IM73A135V01 tape and reel packing information**

7 Reflow soldering and board assembly

Infineon MEMS microphones are qualified in accordance with the IPC/JEDEC J-STD-020D-01. The moisture sensitivity level of MEMS microphones is rated as MSL1. For PCB assembly of the MEMS microphone the widely used reflow soldering using a forced convection oven is recommended.

The soldering profile should be in accordance with the recommendations of the solder paste manufacturer to reach an optimal solder joint quality. The reflow profile shown in ***Figure 15*** is recommended for board manufacturing with Infineon MEMS microphones.

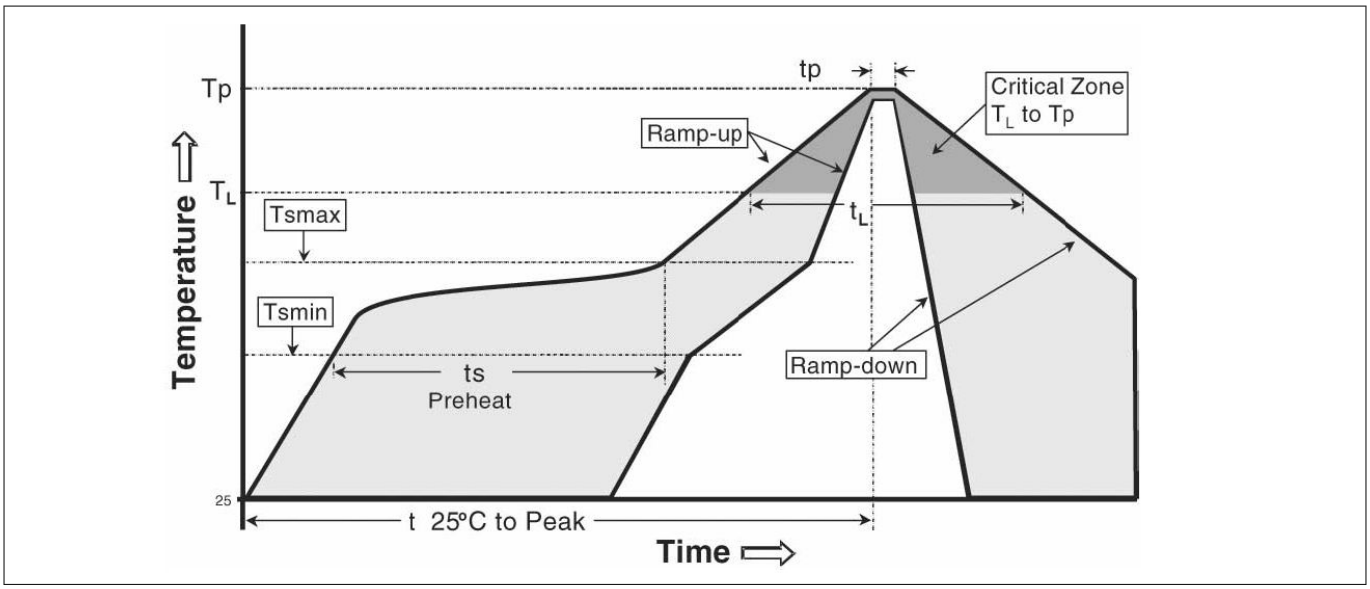

Figure 15 **Recommended reflow profile**

Table 9 **Reflow profile limits**

Profile feature	Pb-Free assembly	Sn-Pb Eutectic assembly
Temperature Min (T_{smin})	150 °C	100 °C
Temperature Max (T_{smax})	200 °C	150 °C
Time (T_{smin} to T_{smax}) (t_s)	60-120 seconds	60-120 seconds
Ramp-up rate (T_L to T_P)	3 °C/second max.	3 °C/second max.
Liquidous temperature (T_L)	217 °C	183 °C
Time (t_L) maintained above T_L	60-150 seconds	60-150 seconds
Peak Temperature (T_p)	260°C +0°C/-5°C	235°C +0°C/-5°C
Time within 5°C of actual peak temperature (tp) [3]	20-40 seconds	10-30 seconds
Ramp-down rate	6 °C/second max.	6 °C/second max.
Time 25°C to peak temperature	8 minutes max.	6 minutes max.

Note: *For further information please consult the 'General recommendation for assembly of Infineon packages' document which is available on the Infineon Technologies* ***web page***

3 Tolerance for peak profile temperature (T_p) is defined as a supplier minimum and a user maximum

Reflow soldering and board assembly

The MEMS microphones can be handled using industry standard pick and place equipment. Care should be taken to avoid damage to the microphone structure as follows:

- Do not pick the microphone with vacuum tools which make contact with the microphone acoustic port hole.
- The microphone acoustic port hole should not be exposed to vacuum, this can destroy or damage the MEMS.
- Do not blow air into the microphone acoustic port hole. If an air blow cleaning process is used, the port hole must be sealed to prevent particle contamination.
- It is recommended to perform the PCB assembly in a clean room environment in order to avoid microphone contamination.
- Air blow and ultrasonic cleaning procedures shall not be applied to MEMS Microphones. A no-clean paste is recommended for the assembly to avoid subsequent cleaning steps. The microphone MEMS can be severely damaged by cleaning substances.
- To prevent the blocking or partial blocking of the sound port during PCB assembly, it is recommended to cover the sound port with protective tape during PCB sawing or system assembly.
- Do not use excessive force to place the microphone on the PCB. The use of industry standard pick and place tools is recommended in order to limit the mechanical force exerted on the package.

8 Reliability specifications

The microphone sensitivity after stress must deviate by no more than 3dB from the initial value.

Table 10 Reliability specification

Test	Abbreviation	Test Condition	Standard
Low Temperature Operating Life	LTOL	T_a=-40°C, VDD=3.6V, 1000 hours	JESD22-A108
Low Temperature Storage Life	LTSL	T_a=-40°C, 1000 hours	JESD22-A119
High Temperature Operation Life	HTOL	T_a=+125°C, VDD=3.6V, 1000 hours	JESD22-A108
High Temperature Storage Life	HTSL	T_a=+125°C, 1000 hours	JESD22-A103
Temperature Cycling	PC + TC	Pre conditioning MSL-1	JESD22-A113
		1000 cycles, -40°C to +125°C, 30 minutes per cycle	JESD22-A104
Temperature Humidity Bias	PC + THB	Pre conditioning MSL-1	JESD22-A113
		T_a=+85°C, R.H = 85%, VDD=3.6V, 1000 hours	JESD22-A101
Vibration Test	VVF	20Hz to 2000Hz with a peak acceleration of 20g in X, Y, and Z for 4 minutes each, total 4 -cycles	IEC 60068-2-6
Mechanical Shock	MS	10000g/0.1msec direction ±x,y,z, 5 shocks in each direction, 5 shocks in total	IEC 60068-2-27
Reflow Solder[4)]	RS	3 reflow cycles, peak temperature = +260°C	IPC-JEDEC J-STD-020D-01
Electrostatic Discharge -System Level Test	ESD - SLT	3 discharges of ±8kV direct contact to lid while V_{dd} is supplied according to the operational modes; (V_{dd} ground is separated from earth ground)	IEC-61000-4-2
Electrostatic Discharge - Human Body Model	ESD - HBM	1 pulse of ±2kV between all I/O pin combinations	JEDEC-JS001
Electrostatic Discharge - Charged Device Model	ESD - CDM	3 discharges of ±500V direct contact to I/O pins.	JEDEC JS-002
Latch up	LU	Trigger current from ±200mA	JESD78

4 The microphone sensitivity must deviate by no more than 1dB from the initial value after 3 reflow cycles.

Revision history

Document version	Date of release	Description of changes
V 1.00	2021-01-07	Initial release
V 1.10	2021-04-19	Updated ***Typical performance characteristics***
V 1.20	2021-07-07	Updated ***Figure 11*** title

Trademarks

All referenced product or service names and trademarks are the property of their respective owners.

Edition 2021-07-07

Published by

Infineon Technologies AG

81726 Munich, Germany

© 2021 Infineon Technologies AG

All Rights Reserved.

Do you have a question about any aspect of this document?

Email: erratum@infineon.com

Document reference
IFX-mcx1539678668960

IMPORTANT NOTICE

The information given in this document shall in no event be regarded as a guarantee of conditions or characteristics ("Beschaffenheitsgarantie").

With respect to any examples, hints or any typical values stated herein and/or any information regarding the application of the product, Infineon Technologies hereby disclaims any and all warranties and liabilities of any kind, including without limitation warranties of non-infringement of intellectual property rights of any third party.

In addition, any information given in this document is subject to customer's compliance with its obligations stated in this document and any applicable legal requirements, norms and standards concerning customer's products and any use of the product of Infineon Technologies in customer's applications.

The data contained in this document is exclusively intended for technically trained staff. It is the responsibility of customer's technical departments to evaluate the suitability of the product for the intended application and the completeness of the product information given in this document with respect to such application.

WARNINGS

Due to technical requirements products may contain dangerous substances. For information on the types in question please contact your nearest Infineon Technologies office.

Except as otherwise explicitly approved by Infineon Technologies in a written document signed by authorized representatives of Infineon Technologies, Infineon Technologies' products may not be used in any applications where a failure of the product or any consequences of the use thereof can reasonably be expected to result in personal injury.

Mouser Electronics

Authorized Distributor

Click to View Pricing, Inventory, Delivery & Lifecycle Information:

Infineon:

IM73A135V01XTSA1 KITIM73A135V01FLEXTOBO1